HITACHI

LIST NO. F868

# ELECTRIC TOOL PARTS LIST

## ■ CORDLESS DRIVER DRILL 2002・2・20

## Model DS 12DVF (E1)

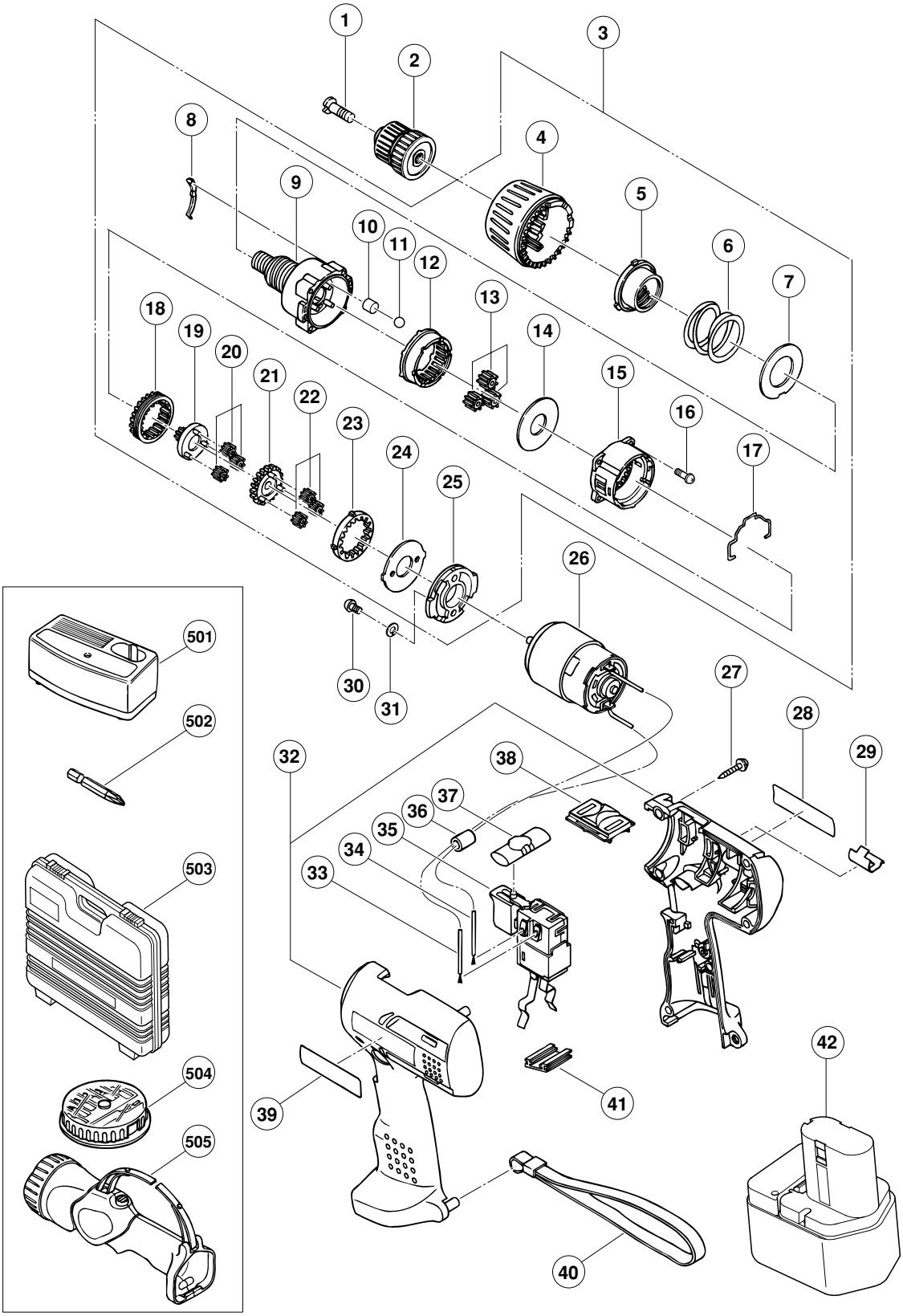

| | ITEM NO. | CODE NO. | DESCRIPTION | NO. USED | REMARKS | |
|---|---|---|---|---|---|---|
| | 1 | 318-228 | SPECIAL SCREW (LEFT HAND) M5X35 | 1 | | |
| | 2 | 312-516 | DRILL CHUCK 10TLRD-N (W/O CHUCK WRENCH) | 1 | | |
| | 3 | 320-660 | GEAR BOX ASS'Y | 1 | INCLUD.4-25 | |
| | 4 | 320-661 | CAP | 1 | | |
| | 5 | 318-232 | NUT | 1 | | |
| | 6 | 312-709 | SPRING | 1 | | |
| | 7 | 312-714 | WASHER (D) | 1 | | |
| | 8 | 312-713 | CLICK SPRING | 1 | | |
| | 9 | 318-230 | FRONT CASE | 1 | | |
| | 10 | 319-744 | ROLLER | 6 | | |
| | 11 | 306-936 | STEEL BALL D5 | 6 | | |
| | 12 | 312-715 | RING GEAR | 1 | | |
| | 13 | 312-705 | PLANET GEAR (C) SET (3 PCS.) | 1 | | |
| | 14 | 312-704 | WASHER (A) | 1 | | |
| | 15 | 312-697 | REAR CASE | 1 | | |
| | 16 | 315-817 | SCREW SET D3X12 (6 PCS.) | 1 | | |
| | 17 | 311-962 | SHIFT ARM | 1 | | |
| | 18 | 315-137 | SLIDE RING GEAR | 1 | | |
| | 19 | 315-805 | PINION (C) | 1 | | |
| | 20 | 315-816 | PLANET GEAR (B) SET (3 PCS.) | 1 | | |
| | 21 | 315-804 | PINION (B) | 1 | | |
| | 22 | 315-815 | PLANET GEAR (A) SET (3 PCS.) | 1 | | |
| | 23 | 315-136 | FIRST RING GEAR | 1 | | |
| | 24 | 312-716 | WASHER (B) | 1 | | |
| | 25 | 318-231 | MOTOR SPACER | 1 | | |
| | 26 | 318-244 | MOTOR | 1 | | |
| | 27 | 991-672 | TAPPING SCREW (W/WASHER) D3X16 | 7 | | |
| * | 28 | | NAME PLATE | 1 | | |
| | 29 | 318-237 | BIT HOLDER | 1 | | |
| | 30 | 949-203 | MACHINE SCREW M3X8 (10 PCS.) | 2 | | |
| | 31 | 949-451 | SPRING WASHER M3 (10 PCS.) | 2 | | |
| | 32 | 320-662 | HOUSING (A).(B) SET | 1 | | |
| | 33 | 306-041 | INTERNAL WIRE (B) (BLACK) | 1 | | |
| | 34 | 306-040 | INTERNAL WIRE (B) (RED) | 1 | | |
| | 35 | 318-245 | DC-SPEED CONTROL SWITCH | 1 | | |
| * | 36 | 318-247 | FERRITE CORE | 1 | FOR FRG,BEL,FRA,ESP,HOL,AUT,ITA,SUI | |
| | 37 | 319-760 | PUSHING BUTTON | 1 | | |
| | 38 | 318-234 | SHIFT KNOB | 1 | | |
| | 39 | | HITACHI LABEL | 1 | | |
| | 40 | 306-952 | STRAP (BLACK) | 1 | | |
| | 41 | 315-141 | TERMINAL SUPPORT (A) | 1 | | |
| * | 42 | 320-608 | BATTERY EB 1214L (W/ENGLISH N.P.) | 1 | | |
| * | 42 | 320-607 | BATTERY EB 1214L (W/ENGLISH N.P.) | 1 | FOR USA,CAN | |
| * | 42 | 320-606 | BATTERY EB 1214L (W/ENGLISH N.P.) | 1 | FOR NZL,KOR | |

# STANDARD ACCESSORIES



| ITEM NO. | CODE NO. | DESCRIPTION | NO. USED | REMARKS | |
|---|---|---|---|---|---|
| 501 | | CHARGER (MODEL UC 12SD) | 1 | | |
| 502 | 318-236 | + DRIVER BIT NO.2 55L | 1 | | |
| 503 | 319-967 | CASE | 1 | | |
| 504 | | BIT SET | 1 | | |
| 505 | | TORCHLIGHT (MODEL UB 12D) | 1 | | |



* ALTERNATIVE PARTS

| ITEM NO. | CODE NO. | DESCRIPTION | NO. USED | REMARKS | |
|---|---|---|---|---|---|
| | | | | | |
| | | | | | |
| | | | | | |